The Impacts of Working Conditions and Employee Competences of Fresh Graduates on Job Expertise, Salary and Job Satisfaction

Jui-Min Hsiao[1,*] and Da-Sen Lin[2]

[1]Department of Applied Economics and Management, National I-Lan University, Taiwan

[2]Department of Sociology, Fo-Guang University, Taiwan

Abstract: This study explores the factors that have critical impacts on job expertise and further analyses on how the jobs affect salary and job satisfaction. Job seekers consider the working conditions when seeking jobs. However, he/she will acquire an ideal job or not, it depends on his/her employee competences. The former is his/her job demands and expectations and the latter is the ability he/she has. These two factors determine his/her job expertise which further influences the salary and job satisfaction.

The data are collected from those new graduates who entering the workforce from Taiwan's universities in 2009 and structural equation modeling is applied for data analysis. Three findings are presented. First of all, the correlation coefficient is 0.40 which indicates strong relationship when it comes to the relation of employee competences and working conditions. Secondly, employee competences have significantly positive impacts on job expertise, salary and job satisfaction. However, working conditions have significantly negative impacts on salary. Finally, job expertise has significantly positive impacts on salary and job satisfaction but salary has no significant impacts on job satisfaction.

Keywords: Working conditions, employee competences, job satisfaction, labor market, structural equation modeling (SEM).

1. INTRODUCTION

In an industrial society, there has been much research of labor market focus on the salary and the level of job satisfaction. There are extrinsic and intrinsic factors can affect worker's job acceptances. Here the extrinsic factor means working conditions which are personal resources that working environment gives such as salary, benefits, work autonomy, organizational culture, etc (Al-Hussami *et al*., 2011; Antony and Valadez, 2002; Muindi, 2011; Ogonda *et al*., 2015). And the intrinsic factor is employee competences which are personal capabilities such as expertise, interpersonal communication, self-regulation, learning and creativity, etc (Garcia, Mora and Vila, 2004; Goffin and Woycheshin, 2006; Suharno and Despinur, 2017; Lin, 2013). Both of factors might affect job's expertise even one's salary and the level of job satisfaction (Hwang, 2001; Lin, 2013, 2016).

The studies in Taiwan in the past show those who have bachelor's degree tend to have higher rank at work and get better pay (Hwang, 1993; Tsai and Mai, 1998), in general, the degree of education seem equivocal about one's performance in the labor market. And the changes in the policy of higher education in Taiwan over the past three decades; which established more higher education institutions after 1987 (Chen, 1991), and restructured junior colleges to universities of technology in 1996 (Lin, 2003), consequently, expending the access to higher education rapidly. In 1950, there were merely 4 universities included colleges in Taiwan, and were not over 27 ones till 1980. During the period from 1986 to 2016, see increases exponentially in the number of universities from 28 to 145 (Ministry of education of Republic of China, 2017), however, grew five times its original value.

Meanwhile, the population of higher education students were mere 184,000, then it had risen to 500,000 in 2000, and followed by a sharply growth to one million in 2008 then reached a peak which to somewhere in the vicinity of 1,038,000 in 2012. However, along with the birth rate drop, also the evident is the fact that the number of higher education students has slid away to 1,015,000 (Ministry of education of Republic of China, 2017). The admission rate of higher education has averagely been 90 percent in recent years, reaching a peak of 97 percent in 2017. Across a wide array of academic professional programs of universities and colleges reveals the diversity and inclusion of education, however, brought a phenomenon of devaluation of academic degree which means higher education no longer linked to higher-paying jobs (Hung, Yin and Tao, 2015; Tao and Chien, 2011; Tsai, 2015).

Therefore, academic degree is no longer a variable to elucidate worker's performance in labor market, on

*Address correspondence to this author at the Department of Applied Economics and management, National I-Lan University, Taiwan;
Tel: +886-3-935-7400 ext7857; Fax: +886-3-936-4347;
E-mail: jmhsiao@niu.edu.tw, jmhsiao@ems.niu.edu.tw

E-ISSN: 1929-7092/18 © 2018 Lifescience Global

the contrary, one of important ways to position oneself ahead of the crowd is employability. Hence, to avoid the variation from the different academic degree, we conducted data analysis with graduates who after archived bachelor's degree and working as full-time for a year, to investigate employee competences, and how the working conditions affect graduate's job expertise, satisfaction and salary. The findings of this research can clarify what factors to affect one's performance in the labor market and also provide the information for education policy makers.

2. LITERATURE REVIEW AND THEORETICAL FRAMEWORK

Employee Competences

Before expending the access of higher education, academic degree tended to prove one's higher labor market performance, but it is no longer enough to guarantee a graduate a satisfying future career, after the admission rate of higher education soars. Therefore, it is necessary to cultivate one's competitiveness in college years to meet the labor market's expectance, to compete for a professional job, better pay and the opportunity of promotion. For employee competencies with different definitions, we regard the cultivation of the competences as a psychological process. Therefore, we use the subjectively assessed by the respondents. And these competitiveness, we refer to as employee competences (Garcia, Mora and Vila, 2004; Goffin and Woycheshin, 2006; Suharno and Despinur, 2017), some scholars name it core competences (Audenaert *et al.,* 2014; Bishop, Cadleand Grubesic, 2015; Wagner, 2010). What is the concrete concept of the competence? Desimone, Werner and Harris (2002), Goffin and Woycheshin (2006) mentioned the competences use a set called KSAO which are knowledge, skills, abilities and others. Noe (2009) defined competences one's abilities to perform his/her work by his/her skills, knowledge, attitude and personality.

Holmes and Hooper (2000) made example of higher education in England, thinking it should contain core technology, expertise, general knowledge and professional competence; likewise personal personality development, employability and social skills are also considered essential. Thomas and Busby (2003) think it should comprised of problem solving, critical think, interpersonal relationships and organizational communication; according to the literature of Lin, Sweet and Anisef (2003), suggested it contains writing, thinking, problem solving, cooperation with others, leadership and learning new techniques. Furthermore, By applying the theory of action, Boreham (2004) considered the crucial part in a workplace is the teamwork, like promoting the process of working collaboratively with a group of people attempts to accomplish its goal, building up the team confidence and developing individual's unique knowledge and ability to help improve other team members; thus, by sharing and encouraging a team that continues to work together will eventually develop an increased level of bonding which are crucial qualities toward employee competences. In the meanwhile, there are some scholars elucidate employability by analyzing data collected from participant observation, consider it is not classified as a sub skill but employees' integral concept of work, in which employee judges by a set of achievements-understandings, skills to achieve their goals. A different point of view, LaFromboise, Coleman and Gerton (1993) who think that having the abilities to intercommunicate, build relationships and consult with people from different cultures is important. Later on, Johnson, Lenartowicz and Apud (2006) proposed an investment in developing employees' autonomous learning to facilitate them to develop self-initiate learning, undertaking tasks independently and work effectively.

With these theories and finding listed above, the employee competence can be seen contain three elements. To begin with, it is leadership which includes, innovation, interpersonal relationships and time management (Garcia *et al*., 2004; Lin, Sweet and Anisef, 2003); next is teamwork ability which contains accommodation, stability, highly stress resistant, teamwork, organization and coordination (Boreham, 2004; Delaney, 2004; Khan, Masrek and Nadzar, 2015; Thomas and Busby, 2003); finally, knowledge ability can be seen as cognitive capacity, professional knowledge, skills, problem solving, foreign language skills etc (Cheetham and Chivers, 2005; Holmes and Hooper, 2000; LaFromboise, Coleman and Gerton, 1993; Suharno and Despinur, 2017). These elements include all the core abilities which employees need in labor market, and be successful in their chosen occupations, which benefits themselves, and the work place.

Thus, we can see employee competence has many aspects and it is highly related to job satisfaction, from a conceptual framework (see Figure **1**) by Khan, Masrek and Nadzar (2015), it shows competences

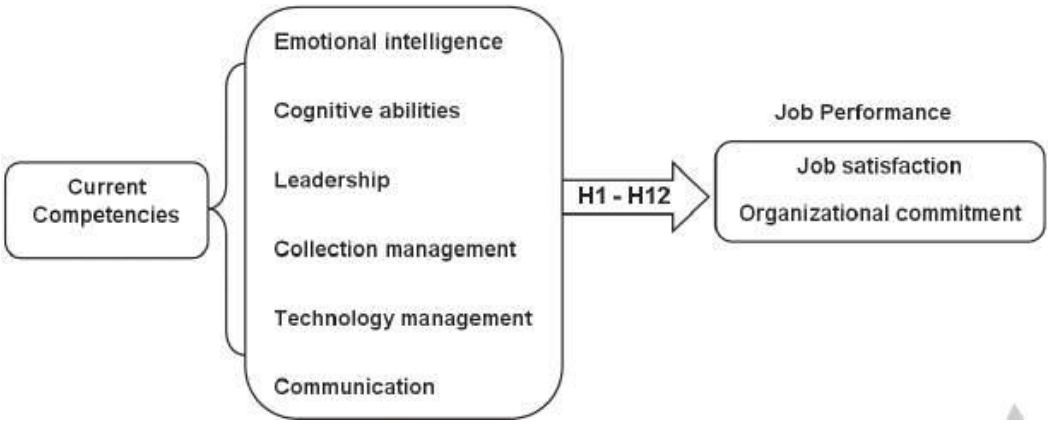

Figure 1: Conceptual Framework. Resource: Khan, Masrek and Nadzar (2015), p. 130.

affect job satisfaction and the commitment to the organization, and once the organizational commitment is not strong enough might influence an employee's intention to leave. However, this framework only emphasized the competences but not the other factors affected on job satisfaction.

Work Condition/Environment

We consider working conditions are extrinsic factors which involve with concrete resources, work rules, therefore, lead to an employee's psychological feedings (Al-Hussami *et al.,* 2011; Antony and Valadez, 2002; Muindi, 2011; Ogonda *et al.,* 2015). Working conditions and environments are the key factors to influence employee's performance at labor market, moreover, working environment has the impacts on the level of employee job satisfaction, even lead to a higher engagement, high level of commitment or choose to leave the work.

In the research of labor marketing, many of them focus on the working conditions, such as Muindi (2011) targeted the population of academic staff in the school of Business, and identified working conditions as these four factors which respectively are hours worked each week, flexibility in scheduling, location of work and vacation time. Iwu, Allen-Ile and Ukpere (2012) probed into collegiate work environment as one of working conditions toward the research of health-related professionals. Basak and Govender (2015) defined working condition as relations with co-worker, interpersonal relations to university academics and revealed these relations have significant impacts on university faculty's satisfaction at work. Vian *et al.* (2015) analyzed samples of public-private partnership (PPP) by qualitative analysis, in which defined working conditions as security, communication, support service and work culture. Ogonda *et al.* (2015) tended to identify working condition as an intangible or idea such as safety, climate and noise. Asegid, Belachew and Yimam (2014) attempted to explain job satisfaction and intention to turnover among nurses in the workplace, and in this study, working environment included making autonomous decision making adjustment in practice, providing a stimulating intellectual environment and allowing opportunity to expand scope of practice etc, therefore, observed these factors were highly linked to work satisfaction and the turnover rate for staff.

After a review of the literature specific to working condition/environment, we observed that it can be identified several different dimensions such as personality traits (autonomy, flexibility), organizational system (career promotion, work culture, security) and interpersonal aspect (relations with co-workers, interpersonal relations). On dichotomous categories, Yap *et al.* (2010) indicate the those affect career satisfaction are comprised of objective and subjective factors. Objective factors include developmental opportunities and promotion. Subjective factors are skill utilization and talent identification. The meaning of objective/subjective is close to extrinsic/intrinsic (Sartorius *et al.,* 2011; Rasool, Jundong and Sohail, 2017), many studies which investigate intrinsic reward are usually about autonomy, flexibility and challenging work; on the other hand, extrinsic rewards are about job security and benefits which are crucial factors of promoting motivation, performance and job satisfaction. Beside, Noorizan *et al.* (2016) investigate factors relating to process of training transfer; they found work environments are a crucial moderating effect. And those environmental factors like support and openness are rather important.

As Sartorius *et al*. (2011) and Rasool, Jundong and Sohail (2017) define work conditions as extrinsic/intrinsic, the labor market study has an

objective-oriented and subjective-oriented approach. The former focuses on salary, benefits, hours worked, location of work, career promotion, developmental opportunities, etc. The latter focuses on interpersonal relations, work culture, autonomous decision making, work challenging and so on. In this study, it is considered that subjective and objective orientation are important, but when it comes to operationalization and measurement, the method of questionnaire questions is considered, and it correspond with previous employee competences. Therefore, both are subjective assessments and cognitions of respondents.

According to the conceptual framework (see Figure **2**) applied by Ogonda *et al.* (2015), it shows working conditions do affect an employee's job satisfaction, besides, personal substantially economic return like compensation and training also have impacts on it. However, compensation might be the result of training, and the variables included in training section is not comprehensive enough. The meaning of "training" in this study is similar to competences listed above which needs to be further discussed.

Job Satisfaction

The competences and conditions that we mentioned above are related to an employee's objective and subjective outcomes of action toward the labor market, the former is about salary, promotion while the latter reflexes to employee's feeling which is job satisfaction. This concept was proposed first by Hoppock (1935), in which identifies job satisfaction is employee's subjective feelings towards his/her satisfaction at workplace on physical and psychological level. It involves employee's emotions and attitudes toward the workplace. It was considered to employee's emotional status from how employees view their jobs and after evaluation rated their work (Locke, 1976). Ghiselli, LaLop and Bai (2001) see it as a positive emotional state which derive from the job experience.

However, some scholars think job satisfaction at least includes five dimensions: work itself, salary, promotion opportunity, partnership, the management of supervisors (Hulin and Smith, 1965); Kim and Loadman's (1994) research reveals that pay satisfaction, opportunities for promotion, the challenges at work and autonomy have positive impacts on job satisfaction. According to Arnett, Laverie and McLane (2002) job satisfaction is a comprehensive appraisal affected by work itself, incentive, working environment and system of the management; Karsh, Booske and Sainfort (2005) see job satisfaction is dimensional concept consisting of intrinsic and extrinsic satisfaction. In sum, job satisfaction is employee's positive emotional state and attitude towards the work itself, and other facets likes working environment, the work context, promotion, relationship with co-workers and pay while in working processes at an organization.

Besides, Wanous, Reichers and Hudy (1997), Nagy (2002) consider single-item approach to measure job satisfaction may contain more face validity than multiple-item scales. For examples, Robbins (2001) perceive job satisfaction as the disparity between an actual reward gain from work environment and expectant reward that are viewed by the employees; Buitendach and De Witte (2005) propose the view that job satisfaction relates to employees‘ evaluations and

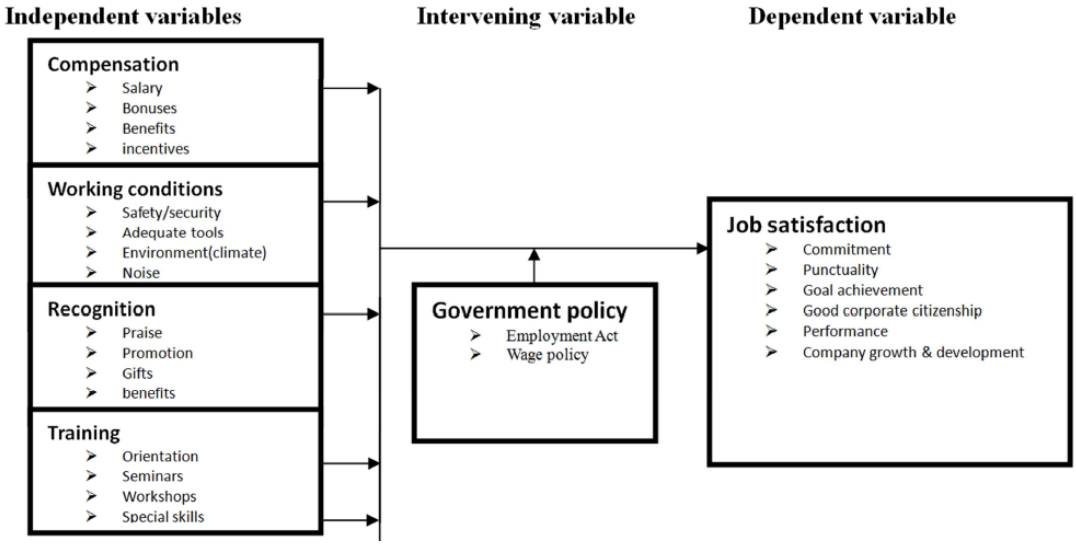

Figure 2: Conceptual Framework. Source: Ogonda, Orwa, Peter and Jedida (2015), p.384.

perceptions of a job, and the perception includes the feelings of many levels, most important of all, employees can see job satisfaction as a single-indicator measure to evaluate work performance. Lu *et al.* (2014) and Klassen, Usher and Bong (2010) proffer job satisfaction is an individual's perceptions of fulfillment and enjoyment derived from work.

According to Chung *et al.* (2010), factors that influence job satisfaction are individual, departmental and institutional characteristics. Institutional characteristic includes career promotion, collegiality, compensation and collaboration; and individual characteristic contains autonomy. Wee (2013) mention the concept of career development which comprises organization provides opportunities to enhance employees' personal abilities, skills, knowledge as well as their potential which has profound impact on job satisfaction too. As suggested by Kim *et al.* (2009), competence has mediating effect while it influences work performance which leads to job satisfaction. In studies of Chen *et al.* (2009) which analyze the nurse from health care facility, and the research of Lin and Hwang (2016) sample of a population of elementary and junior high school faculties, both reveal work profession is positively associated with job satisfaction. Research has also shown that compensation, salary, bonuses, benefits are the crucial factors to affect job satisfaction (Basak and Govender, 2015; Ogonda *et al.,* 2015). Thus it can be seen, these factors include employee competences, work environment, profession and salary are all interrelated and interact with job satisfaction on the labor market.

Theoretical Framework and Hypotheses

Obviously, no matter is the conceptual framework (see Figure **1**) from Khan, Masrek and Nadzar (2015) or the framework (see Figure **2**) from Ogonda *et al.* (2015), suggesting this represents a viable direction for further research. Thus based on the previous discussion, Figure **3** shows the conceptual framework for this paper.

In our analysis, the independent variables are competence and condition, both have impacts on job performance; and objective dimension are profession and salary. Job satisfaction belongs to subject dimension. In this framework, we set mediate variables are profession and salary and dependent variable is job satisfaction.

The hypotheses developed for the study are as shown below.

H1a: Work conditions has a impact on job profession.

H1b: Work conditions has a impact on salary.

H1c: Work conditions has a impact on job satisfaction.

H2a: Employee competences has a impact on job profession.

H2b: Employee competences has a impact on salary.

H2c: Employee competences has a impact on job satisfaction.

H3a: Job profession has a impact on salary.

H3b: Job profession has a impact on job satisfaction.

H4: Salary has a impact on job satisfaction.

3. RESEARCH METHODOLOGY

Data

This research employed a secondary data analysis, and the data was collected from Taiwan Integrated

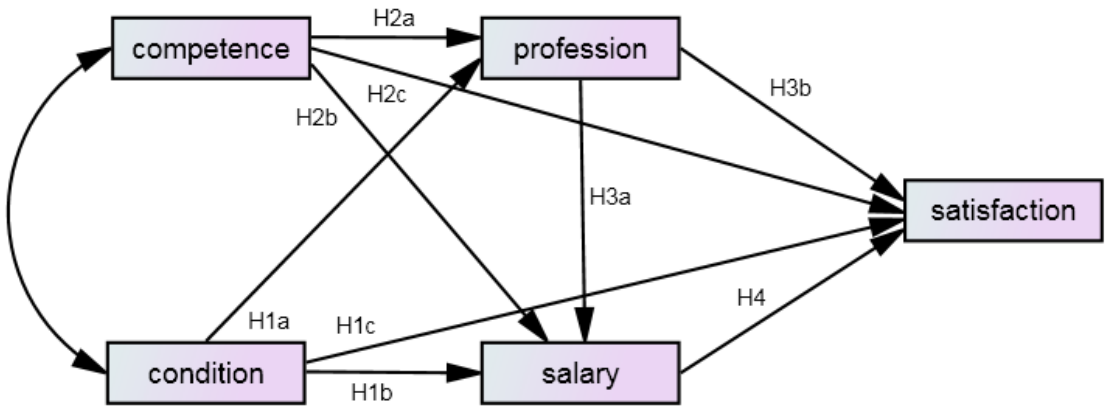

Figure 3: Theoretical Framework for this research.

Postsecondary Education Database which is hosted by center for educational research and evaluation of National Taiwan Normal University, this is the only research centre used for collecting data from the students and faculties of nationwide higher education. The purpose of this study therefore is to collect data from the bachelor' s of the class of 2006 and their status of one year after degree and to explore the relationship between their school experiences and post-degree path. The data collection is from March 2008 to January 2009. The variance would have been too large due to twenty educational systems towards university at all levels in Taiwan, thus data are limited to the population of graduating from four-year university. Moreover, through an extensive data-cleaning procedure to screen out responses[1] that are wildly out of the range, illogical, contradictory and employed casewise deletion to eliminate missing value, finally, selected the sample of 512 recipient of bachelor's degree. Before the 512 analysis samples of this study have been selected, there are more than 20,000 full-time jobs with original number of original survey data samples, but the variances of this group are too large (such as too high or too low for weekly hours of work, job hunting time is too high. It's too long or too short.) Therefore, we have to limit the sample to a certain range according to the standards that labor market study pays attention to. The selected 512 samples of this study is closer to the normal distribution than the salaries and satisfaction variables of the 20,000 samples of the original survey. This shows that the analysis of the selected 512 samples can get more reasonable results.

Iacobucci (2010) proffer the sample should not fall short of 200 subjects while using SEM model. Hair *et al*. (2009) consider the constructs of model analyses are complex and low communities, the number of samples should be at least 500. Another rule of thumb based on Stevens (2009), is to have at least 15 cases per observed variables. This study has 25 observed variables and the number of sample are 512. This combination is consistent with the empirical literature mentioned above.

[1][weekly hours of work] mentioned in the survey questionnaire, the answers from recipients are quite widespread which is from 0-12 hours to 133-144 hours. It is senseless for full time employees one year after bachelor's, therefore, this study limited working hours as 37-48 hours per week. And the [job hunting time] in the survey vary greatly from less than a month to more than a year, so the answer limit within 4-6 months. And we also eliminate those answered others on survey questions [sectors of job] and [categories of occupation].

Method of Analysis

This study is analyzed by structural equation modeling (SEM). Usually, a general linear equation modeling hypothesizes that there are linear relationships between two variables and these relationships can be expressed by linear equation. And SEM procedures based on the hypothesis of the linear relationship is used to analyze the structural relationships among variables. This technique is the combination of multiple regression analysis and factor analysis. There are two kinds of variables in this modeling, one is observed variable/indicator which can be collected from questionnaires; the other one is structural variable (or called latent variable) which not directly acquire via observation but infers from other observed variables.

Confirmatory Factor Analysis (CFA) is a part of SEM analysis. Before analyzing the structural model, measurement model should be tested first, this is because measurement model can correctly reflex the study's constructs or factors (Kline, 2013; Thompson, 2004). Specifying measurement models before employing SEM analysis, as indicated by an acceptable value of goodness-of-fit index, then a SEM is considered suitable to apply (Byrne, 2009; Kline, 2013; Raykov and Marcoulides, 2006).

Variables and Measurement

The reason why we adapted SEM is the framework of this research contains many latent constructs which derived from indicators. The manifest indicator of each latent construct as shown in Table **1**, and the measurement as shown in the right column of the table.

4. RESULTS

Descriptive Statistics

Table **2** is the overall summary of the respondents' profile by frequency and percentage. The male-to-female ratio was 1:2, due to the questionnaire was taken one year after degree's, part of males was in mandatory military service, the majority of graduates in labor market are females. The question “The entry level education of your present job”, answer chosen to University is 44%; explains 56% of graduates is related to a likelihood of over-educated for their present work. For occupational status, we compare graduates in whom worked professional job (39%) is associated with highest percentage than other measurements. With regard to job related to graduates' degree/major,

Table 1: Constructs and Indicator

construct	Variable/indicator	Measurement
Job1	When I choose a job, salary is	1=not very important 2=not important 3=important 4=very import
	When I choose a job, benefits are	
	When I choose a job, job stability is	
Job2	When I choose a job, a job matches your interest is	
	When I choose a job, a job matches your specialty is	
	When I choose a job, a job beneficial to society is	
Job3	When I choose a job, more promotion opportunities are	
	When I choose a job, challenging job is	
	When I choose a job, job autonomy is	
	When I choose a job, the opportunities for growth at work are	
Skill1	Assess your interpersonal communication skills at the work	1=very weak 2=weak 3=strong 4=very strong
	Assess your ability of leadership the work	
	Assess your ability of problem discovering and solving at work	
	Assess your ability of selling yourself at the work	
Skill2	Assess your stability and stress resistance at the work	
	Assess your ability to cope at work	
	Asses your ability to learn at work	
Skill3	Assess your ability of innovation at work	
	Assess your professional knowledge and technical skills at work	
	Assess your ability of applying professional knowledge to work	
Howedu	The entry level education of your present job	1=junior high school 2=high school 3=junior college 4=university or above
Occ	Occupational status score	1=retail/blue collar 2=office clerk 3=semi-professional 4=professional
Match	Is your present job related to your degree/major	1=irrelevant 2=partial relevant 3=mostly relevant 4=relevant
salary	Average monthly salary	1=less than 20,000 2=20,000-25,000 3=25,000-30,000 4=30,000-35,000 5=35,000-45,000 6=over 45,000
satisfaction	Job satisfaction towards your present job	1=very unsatisfied 2=unsatisfied 3=satisfied 4=very satisfied

Table 2: Overall Summary of Profile of the Respondents by Frequency and Percentage

Variable/ indicator	measurement	frequency	percentage
gender	Male	172	33.59%
	female	340	66.41%
howedu	Junior high school	10	1.95%
	High school	102	19.92%
	Junior college	175	34.18%
	University and above	225	43.95%
occ	retail/ blue-collars	85	16.60%
	Office work	119	23.24%
	Semi-professional	107	20.90%
	Professional	201	39.26%
match	irrelevant	148	28.91%
	Partially relevant	154	30.08%
	Mostly relevant	96	18.75%
	Very relevant	114	22.27%
salary	Less than 20,000	40	7.81%
	20,000 – 25,000	106	20.70%
	25,000 – 30,000	143	27.93%
	30,000 – 35,000	95	18.55%
	35,000 – 45,000	84	16.41%
	More than 45,000	44	8.59%
satisfaction	Very unsatisfied	8	1.56%
	Unsatisfied	94	18.36%
	Satisfied	332	64.84%
	Very satisfied	78	15.23%
	Total	512	100.00%

first, we find that graduates' job mostly relevant and relevant to their degree is at 41%, and those work irrelevant, partially relevant to their major accounts for 30% respectively. Thus, we can see Taiwan's higher educational mismatch in the actual employment one year after degree's. The incidence of salary for the full sample of the graduates, we find that 28% of the graduates' average monthly salary is about NT 25,000 to 30,000 and those who earn NT 20,000 to 25,000 and NT 30,000 to 35,000 account for 20% respectively. Thus, estimated by the distribution of income, the average monthly income for the full sample of the graduates is NT 30,000. Regarding to job satisfaction, overall, above 80% recipients are feel satisfied with the jobs they have.

We assessed all the structures of this study via confirmatory factor analysis. The results of analysis as shown in Table **3**. The standardized estimate (factor loading) of questionnaire is 0.5-0.9. Hair *et al*. (2009) suggest that composite reliability (CR) around 0.7 indicated acceptable reliability; the structures of this study are fit in this standard except the structure job2 and profession. By integrating the above mentioned, the nine structures in this model have convergent validity.

Interpretation of Path Coefficients of Structural Model

SEM of this research as shown in Figure **4**. We choose some indices to examine the goodness-of-fit index of this model. Which are $\chi 2/df$, GFI, CFI, IFI, RMSEA, According to the literature of Byrne (2009), Iacobucci (2010), Jackson, Gillaspy and Purc-Stephenson (2009), McDonald and Ho (2002),

Table 3: Latent Structure and Reliability Analysis

construct	indicator	Unstandardized Estimate	S.E.	t-value	P	Standardized Estimate	CR
skill1	skill_23	1.000				.711	.763
skill1	skill_11	.750	.058	12.841	***	.657	
skill1	skill_13	.879	.067	13.060	***	.670	
skill1	skill_18	.745	.060	12.380	***	.631	
skill2	skill_112	1.000				.733	.837
skill2	skill_110	1.121	.070	16.105	***	.767	
skill2	skill_111	1.198	.070	17.102	***	.878	
skill3	skill_22	1.000				.831	.790
skill3	skill_21	.952	.051	18.692	***	.811	
skill3	skill_14	.721	.056	12.974	***	.580	
job1	job_3	1.000				.469	.761
job1	job_1	1.550	.157	9.842	***	.768	
job1	job_2	1.776	.184	9.629	***	.882	
job2	job_13	1.000				.584	.680
job2	job_10	1.131	.103	11.003	***	.675	
job2	job_12	1.154	.105	10.978	***	.672	
job3	job_11	1.000				.685	.757
job3	job_7	.956	.082	11.657	***	.603	
job3	job_8	1.115	.085	13.181	***	.699	
job3	job_9	1.007	.080	12.553	***	.658	
profession	howedu	1.000				.551	.612
profession	occ	1.416	.181	7.836	***	.572	
profession	match	1.573	.195	8.058	***	.638	
competency	skill1	1.000				.866	.853
competency	skill2	.563	.060	9.459	***	.611	
competency	skill3	1.148	.100	11.432	***	.936	
condition	job1	1.000				.512	.862
condition	job2	2.870	.442	6.488	***	.974	
condition	job3	2.710	.402	6.736	***	.925	

"*" p<.05 "**" p<.01 "***" p<.001.

Schreiber (2008) suggest that χ2/df should be less than 3, less the point of 0.90 have been recommended for the GFI, CFI, IFI and the value of RMSEA should be less than 0.08 signify good fit indices. In this study, it indicates the adequate fit to the given data in terms of (χ2/df =2.961, GFI =.892, CFI =.882, IFI =.883 and RMSEA =.062), the other indices as GFI, CFI, IFI are slightly more than the suggested value, but RMSEA meets the criteria which indicates the model match the data we provided. The sample covariances matrix is consigned to Appendix 1.

After complete the model's constructs, we analyze the influences of each path and test the hypothesis of this study. In Table **4**, we can see working condition is not strong related to profession and job satisfaction, but does have a significant influence on salary, and we also notice its coefficient is negative which means H1b provided strong support to investigate this relationship in this model. It tells us that the recipients who consider working condition, environment important cannot get professional job and better pay. As for the competence, profession (H2a), salary (H2b) and job satisfaction (H2c) are directly and strong related to it, which means it can be concluded that the graduates who have higher competence not only can get the profession job and better pay but also meet higher job satisfaction. The results of H3a, H3b suggest that profession had

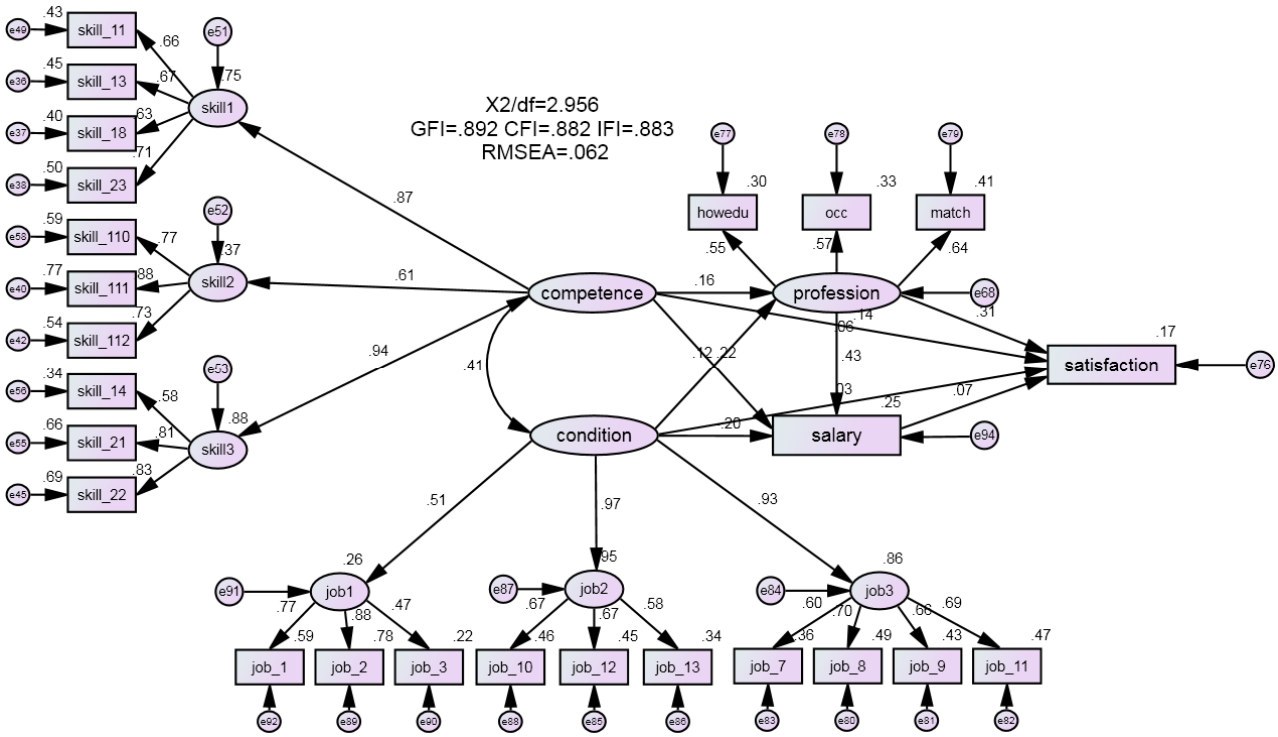

Figure 4: Structural Equation Modeling of this research.

Table 4: Path Coefficients of Structural Model

		Standardized Estimate	S.E.	t-value	P-value
H1a	condition → profession	.120	.235	1.647	P>.05
H1b	condition → salary	-.196	.594	-3.289	***
H1c	condition → satisfaction	.031	.250	.558	P>.05
H2a	competence → profession	.159	.077	2.208	*
H2b	competence → salary	.221	.184	4.005	***
H2c	competence → satisfaction	.143	.083	2.556	*
H3a	profession → salary	.431	.207	6.434	***
H3b	profession → satisfaction	.310	.098	4.394	***
H4	salary → satisfaction	.066	.024	1.252	P>.05

"*" p<.05 "**" p<.01 "***" p<.001.

significant positive contributions to both salary and job satisfaction. In another words, professional jobs lead to the higher level of job satisfaction and salary. In the last, we notice that salary is not strong related to the satisfaction which means good salary cannot improve satisfaction of job. H4 does not provide support to investigate this relationship in this model.

5. DISCUSSIONS

Findings and Implication

The objective of this study is to analyze the impacts of new graduate's working conditions and employee competences on their job expertise, salary and job satisfaction. The target population consists of graduates of Taiwan's universities one year after degree's in 2009. In Taiwan, due to expending the access to higher education, we are facing several challenges such as devaluation of academic degree and low salary. This study adapted secondary data which was collected from National Taiwan Normal University for analysis in SEM. The results indicate employee competence has a positive impact on job expertise, salary and the level of job satisfaction, but working environment is not directly related to job expertise and job satisfaction, even has a negative impact on salary.

Appendix 1: Sample Covariances Matrix

	salary	job_1	job_3	job_2	job_10	job_13	job_12	job_7	job_11	job_9	job_8	sat	match	occ	howedu	skill_110	skill_14	skill_21	skill_11	skill_22	skill_112	skill_111	skill_23	skill_18	skill_13
salary	1.964																								
job_1	0.106	0.306																							
job_3	-0.038	0.112	0.342																						
job_2	0.026	0.209	0.132	0.305																					
job_10	-0.103	0.072	0.074	0.094	0.481																				
job_13	-0.046	0.079	0.07	0.098	0.15	0.502																			
job_12	0.012	0.111	0.119	0.131	0.259	0.192	0.504																		
job_7	-0.013	0.126	0.108	0.135	0.141	0.153	0.144	0.425																	
job_11	-0.035	0.08	0.079	0.092	0.238	0.178	0.201	0.138	0.36																
job_9	0.048	0.093	0.076	0.1	0.183	0.154	0.154	0.158	0.149	0.396															
job_8	-0.001	0.062	0.066	0.075	0.158	0.213	0.138	0.217	0.179	0.219	0.43														
sat	0.207	0.032	0.033	0.025	0.024	0.018	0.068	0.029	0.034	0.029	0.049	0.394													
match	0.409	0.074	-0.001	0.063	0.084	0.104	0.184	0.016	0.043	0.061	0.082	0.154	1.247												
occ	0.446	0.039	-0.008	0.007	0.008	0.024	0.077	-0.01	-0.013	0.021	0.051	0.136	0.464	1.258											
howedu	0.27	0.062	0.034	0.027	0.012	0.028	0.052	0.021	-0.007	0.014	0	0.132	0.322	0.282	0.675										
skill_110	0.106	0.039	0.032	0.034	0.045	0.048	0.046	0.064	0.063	0.062	0.075	0.05	0.039	0.029	0.043	0.321									
skill_14	0.087	0.02	-0.019	0.024	0.062	0.053	0.065	0.051	0.028	0.102	0.09	0.031	0.023	0.04	0.053	0.119	0.413								
skill_21	0.147	0.037	0.009	0.037	0.074	0.091	0.118	0.043	0.045	0.081	0.09	0.059	0.114	0.065	0.03	0.135	0.166	0.368							
skill_11	0.094	0.031	0.013	0.021	0.052	0.061	0.043	0.05	0.029	0.077	0.062	0.064	0.012	-0.008	0.041	0.079	0.164	0.134	0.308						
skill_22	0.151	0.058	0.046	0.053	0.061	0.104	0.105	0.062	0.045	0.09	0.09	0.072	0.117	0.091	0.065	0.135	0.168	0.268	0.133	0.386					
skill_112	0.041	0.036	0.043	0.043	0.066	0.051	0.057	0.083	0.086	0.077	0.08	0.054	0.001	-0.008	0.01	0.149	0.106	0.139	0.094	0.147	0.28				
skill_111	0.077	0.035	0.037	0.033	0.055	0.051	0.06	0.07	0.072	0.058	0.076	0.051	0.004	-0.022	0.003	0.209	0.096	0.106	0.078	0.118	0.183	0.28			
skill_23	0.177	0.029	0.004	0.04	0.036	0.077	0.066	0.071	0.021	0.085	0.093	0.073	0.056	0.041	0.043	0.122	0.195	0.193	0.166	0.226	0.132	0.102	0.469		
skill_18	0.12	0.015	0.025	0.025	0.051	0.038	0.038	0.049	0.042	0.065	0.061	0.051	0.007	0.073	0.026	0.086	0.148	0.159	0.126	0.158	0.115	0.075	0.165	0.33	
skill_13	0.13	0.029	0.03	0.026	0.026	0.057	0.033	0.09	0.014	0.089	0.075	0.038	-0.012	0.016	0.051	0.095	0.234	0.127	0.186	0.146	0.106	0.081	0.21	0.155	0.407

We consider competence cultivated, labor market environment, salary attainment and job satisfaction as a dynamic process. From the professional training within the school to the labor market performances, and from external conditions to psychological satisfaction, the linkage between higher education and labor market is verified one by one. In the process of job conditions affecting job satisfaction, based on the literature of Al-Hussami *et al*. (2011), Antony and Valadez (2002), Muindi (2011) and Ogonda *et al*. (2015), working condition involve with concrete resources and employee's psychological feelings, which may lead to one's performance and satisfaction at workplace. However, this study reveals that working environment is not strongly related to job expertise and job satisfaction. The reasons could be the working environment we define in this study are individual's requests towards working environment and conditions. Thus, an individual consider working conditions beyond his/her competences, he/her might not be able to have a professional job and reach higher level of job satisfaction, even work for poor salary.

On the other hand, there are different findings in the influence of employee competences on job satisfaction. What if we only consider employee competences instead of those extrinsic condition, how does it influence the job? This study suggest that employees who have higher competences acquire more professional jobs, better pay and promote to higher level of job satisfaction. Thus, the employee competences such as expertise, interpersonal communication skills, self-regulation, learning and innovation (Garcia, Mora and Vila, 2004; Goffin and Woycheshin, 2006; Suharno and Despinur, 2017) are highly related to the promotion of one's competitiveness and value in the labor market.

Comparison of external work conditions and internal employee competences for job satisfaction, based on the findings of this study, we suggest that new graduates who just entered the labor market should take the initiative to boost their own competences and competitiveness instead of focusing on the extrinsic conditions which not have positive impacts on getting a professional jobs and the job satisfaction.

According to this research, it shows higher expertise level tends to better pay and satisfaction at work. However, results further indicate higher pay does not lead to higher level of job satisfaction, in another words, employee's satisfaction derives from high employee competences and profession.

Regarding policy implications and recommendations, in recent years, due to sub-replacement fertility in Taiwan, there are many opportunities for higher education enrollment. Almost all high school graduates can enter university and can choose the ideal major. Therefore, in terms of education policy implications, we suggest that the government should be able to deregulation the institutions (such as courses, credit limits), and thus make the university more flexible. As for teachers, more students should be encouraged to learn in multiple ways, cross-domain learning, and to cultivate diversified abilities and improve professional high employee competences in order to achieve higher job satisfaction.

LIMITATION OF THE STUDY

There are several research limitations in this present study that may also serve as further extension. First, the organizational commitment, intention to turnover mentioned in previous literature are important issues in labor market research, too. The study does not contain these issues due to lack of relevant data from the original survey questionnaire. Second, this data was collected from those new graduates on year after archived bachelor's. It had led to a slowdown in university expansion in Taiwan 2008; data collected from 2009 is still worth investigating. Last, there are some studies has reported the relationship between certificate/license and employee's performance at work (Feltovich, Harbaugh and To, 2002; Lin, 2013; Tao and Hsiao, 2013; Weeden, 2002), Taiwan's technological and vocational education system emphasize the importance of receiving certificate, it would be ideal to collect data includes this factor for further investigation.

REFERENCES

Al-Hussami, M., Saleh, M., Abdalkader, R. H., and Mahadeen, A. I. (2011). Predictors of Nursing Faculty Members Organizational Commitment in Governmental Universities. *Journal of Nursing Management 19*, 556-566. https://doi.org/10.1111/j.1365-2834.2010.01148.x

Antony, J. S., and Valadez, J. R. (2002) Exploring the Satisfaction of Part-time College Faculty in the United States. *Review of Higher Education, 26*, 41-56. https://doi.org/10.1353/rhe.2002.0023

Arnett, D.B., Laverie, D. A., and McLane, C. (2002). Using job satisfaction and pride as internal-marketing tools. *The Cornell Hotel and Restaurant Administration Quarterly, 43* (2), 87-96. https://doi.org/10.1177/001088040204300209

Asegid, A., Belachew, T., and Yimam, E. (2014). Factors Influencing Job Satisfaction and Anticipated Turnover among Nurses in Sidama Zone Public Health Facilities, South Ethiopia. *Nursing Research and Practice, 2014,* 1-26. https://doi.org/10.1155/2014/909768

Audenaert, M., Vanderstraeten, A., Buyens, D. and Desmidt, S. (2014). Does alignment elicit competency-based HRM? A systematic review. *Management Revue, 25* (1), 5-26. https://doi.org/10.5771/0935-9915-2014-1-5

Basak, S. K. and Govender, D. (2015). Theoretical Framework Of The Factors Affecting University Academics Job Satisfaction. *International Business and Economics Research Journal, 14* (2), 317-326. https://doi.org/10.19030/iber.v14i2.9167

Bishop, B. W., Cadle, A. W. and Grubesic, T. H. (2015). Job analyses of emerging information professions: A survey validation of core competencies to inform curricula. *The Library Quarterly: Information, Community, Policy, 85* (1), 64-84. https://doi.org/10.1086/679026

Boreham, N. (2004). A theory of collective competence: Challenging the neo-liberal individualisation of performance at work. *British Journal of Educational Studies, 52* (1), 5-17. https://doi.org/10.1111/j.1467-8527.2004.00251.x

Buitendach, J.H. and De Witte, H. (2005). Job insecurity, extrinsic and intrinsic job satisfaction and affective organisational commitment of maintenance workers in a parastatal. *South African Journal of Business Management, 36* (2), 27-37.

Byrne, B. M. (2009). Structural Equation Modeling With AMOS: Basic Concepts, Applications, and Programming (2nd ed.) NY: Routledge.

Cheethan, G., and Chivers, G. (2005). *Professionals, competence and informal learning*. Northampton, MA: Edward Elgar.

Chen C. K., Lin, C., Wang, S.H., and Hou, T. H. (2009). A study of job stress, stress coping strategies, and job satisfaction for nurses working in middle-level hospital operating room. *The Journal Nursing Research, 17* (3), 199-211. https://doi.org/10.1097/JNR.0b013e3181b2557b

Chen, S.-F. (1991). A Review of the Policy of Setting up Higher Education in the Post-War Taiwan. In Lai, J.-H.and Huang, C.-C. (eds.) *The Development Experience of Taiwan in the Post-War Era*. Pp.205-237. Taipei: Sun Yat-Sen Institute for Social Sciences and Philosophy. Academia Sinica (in Chinese).

Chung, K. C., Song, J. W., Kim, H. M., Woolliscroft, J. O., Quint, E. H., Lukacs, N. W., and Gyetko, M. R. (2010). Predictors of job satisfaction among Academic Faculty: Do instructional and clinical faculty differ? *Medical Education, 44* (10), 985-995. https://doi.org/10.1111/j.1365-2923.2010.03766.x

Delaney, A. M. (2004). Ideas to enhance higher education's impact on graduates' lives; alumni recommendations. *Tertiary education and Management, 10* (2), 89-105. https://doi.org/10.1080/13583883.2004.9967120

Desimone, R. L., Werner, J. M., and Harris, D. M. (2002). *Human resource development* (3rd). Orlando, FL: Harcourt College.

Feltovich, N., Harbaugh, R., and To, T. (2002). Too cool for school? Signalling and countersignalling. *RAND Journal of Economics, 33* (4), 630-649. https://doi.org/10.2307/3087478

Garcia, A., Mora, J. G., and Vila, L. E. (2004). The rewards of human capital competences for young European higher education graduates. *Tertiary Education and Management, 10* (4), 287-305. https://doi.org/10.1080/13583883.2004.9967133

Ghiselli, R. F., LaLopa, J. M. and Bai, B. (2001). Job satisfaction, life satisfaction, and turnover intent among food-service managers. *The Cornell Hotel and Restaurant Administration Quarterly, 42* (2), 28-37. https://doi.org/10.1016/S0010-8804(01)80036-7

Goffin, R. D., and Woycheshin, D. E. (2006) An empirical method of determining employee competencies/KSAOs from task-based job analysis. *Military Psychology, 18* (2), 121-130. https://doi.org/10.1207/s15327876mp1802_2

Hair, J. F., Black, W. C., Babin, B. J., and Anderson, R. E. (2009). *Multivariate Data Analysis* (7th). Englewood Cliffs, N.J. Prentice Hall.

Holmes, G., and Hooper, N. (2000). Core competence and education. *Higher Education, 40* (3), 247-258. https://doi.org/10.1023/A:1004003032197

Hoppock, R. (1935). *Job satisfaction*. Oxford, UK: Harper.

Hulin, C. L. and Smith, P. C. (1965). A linear model of job satisfaction. *Journal of Applied Psychology, 49* (3), 209-216. https://doi.org/10.1037/h0022164

Hung, C.-Y., Yin, C.-C. and Tao, H.-L. (2015). The Effects of Education-Job Mismatches on Earnings and Job Satisfaction: The Case of Female College Graduates in Taiwan. *Taiwan Journal of Sociology of Education, 15* (1), 43-87 (in Chinese).

Hwang, Y-J. (1993). The influence of education over occupational status attainment in the process of economic development in Taiwan. *Bulletin of the Institute of Ethnology Academia Sinica, 74*, 125-161 (in Chinese).

Hwang, Y-J. (2001). A Comparative Analysis of Career Achievements in Taiwan's Multiple Labor Markets. *Proceedings of the National Science Council, 11* (4), 356-370 (in Chinese).

Iacobucci, D. (2010). Structural equations modeling: Fit Indices, sample size, and advanced topics. *Journal of Consumer Psychology, 20*, 90-98. https://doi.org/10.1016/j.jcps.2009.09.003

Iwu,C. G., Allen-Ile, C. and Ukpere, W. I. (2012). A model of employee satisfaction amongst health-related professionals in South Africa: The case of Western Cape Province. *African Journal of Business Management, 6* (34), 9658-9670.

Jackson, D.L., Gillaspy J.A., and Purc-Stephenson, R. (2009). Reporting practices in confirmatory factor analysis: An overview and some recommendations. *Psychological Methods, 14* (1), 6-23. https://doi.org/10.1037/a0014694

Johnson, J. P., Lenartowicz, T., and Apud, S. (2006). Cross-cultural competence in international business: Toward a definition and a model. *Journal of International Business Studies, 37* (4), 525-543. https://doi.org/10.1057/palgrave.jibs.8400205

Karsh, B., Booske, B. C., and Sainfort, F. (2005). Job and organizational determinants of nursing home employee commitment, job satisfaction and intent to turnover. *Ergonomics, 48* (10), 1260-1281. https://doi.org/10.1080/00140130500197195

Khan, A., Masrek, M. N. and Nadzar, F. M. (2015). Analysis of competencies, job satisfaction and organizational commitment as indicators of job performance: A conceptual framework. *Education for Information, 31*, 125–141. https://doi.org/10.3233/EFI-150954

Kim, I., and Loadman, W. E. (1994). *Predicting teacher job satisfaction*. Retrieved April 24, 2012, from http://eric.ed.gov/?id=ED383707.

Kim, T.-Y., Cable, D.M., Kim, S.-P. and Wang, J. (2009). Emotional competence and work performance: The mediating effect of proactivity and the moderating effect of job autonomy. *Journal of Organizational Behavior, 30* (7), 983-1000. https://doi.org/10.1002/job.610

Klassen, R. M., Usher, E. L., and Bong, M. (2010). Teachers' collective efficacy, job satisfaction, and job stress in cross-cultural context. *The Journal of Experimental Education, 78* (4), 464-486. https://doi.org/10.1080/00220970903292975

Kline, R. B. (2013). *Principles and practice of structural equation modeling* (3rd). NY: The Guilford Press.

LaFromboise, T., Coleman, H.L., and Gerton, J. (1993). Psychological impact of biculturalism: Evidence and theory. *Psychological Bulletin*, *114* (3), 395-412. https://doi.org/10.1037/0033-2909.114.3.395

Lin, D.-S. (2003). *A Sociological Analysis of the Transformation of the Higher Technological and Vocational Education*. NanHua University press (in Chinese).

Lin, D.-S. (2013). An Examination of the Relationship among University Graduates' Employment Competency,

Professional Certificates/Licenses and Wages. *Educational Policy Forum, 16* (1), 1-37 (in Chinese).

Lin, D.-S. (2016). An Analysis on Employee Competency, Salary, and Job Satisfaction of Master's Graduates. *Journal of Education Policy and Management, 1*, 133-170 (in Chinese).

Lin, H-M. and Hwang Y-J. (2016). A study of job satisfaction of elementary/secondary school teachers in Taiwan-Comparison with other occupations. *Contemporary Educational Research Quarterly, 24* (3), 29-64 (in Chinese).

Lin, Z., Sweet, R., and Anisef, P. (2003). Consequences and policy implications for university students who have chosen liberal or vocational education in Canada: Labour market outcomes and employability skills. *Higher Education Policy,16*, 55-85. https://doi.org/10.1057/palgrave.hep.8300002

Locke, E. A. (1976). The nature and causes of job satisfaction. In M. D. Dunnette (Ed.), *Handbook of industrial and organizational psychology* (pp. 1297-1349). IL: Rand McNally and Co.

Lu, H., Liang, B., Li, Y. and He, N. (2014). Professional commitment and fob satisfaction: An analysis of the Chinese judicial reforms from the perspective of the criminal defense. *China Review, 14* (2), 159-181.

McDonald, R.P., and Ho, M. H. R. (2002). Principles and practice in reporting structural equation analyses. *Psychological Methods, 7*, 64–82. https://doi.org/10.1037/1082-989X.7.1.64

Ministry of education of Republic of China (2017). *Education Statistics 2017*. Taipei: Ministry of education of Republic of China (in Chinese).

Muindi, F. K. (2011). The Relationship between Participation in Decision Making and Job Satisfaction among Academic Staff in the School of Business, University of Nairobi. *Journal of Human Resources Management Research, 2011,*1-34. https://doi.org/10.5171/2011.246460

Nagy, S. M. (2002). Using a single-item approach to measure facet job satisfaction. *Journal of Occupational and Organizational Psychology, 75* (1), 77-86. https://doi.org/10.1348/096317902167658

Noe, R. A. (2009). *Employee training and development (5th)*. Singapore: McGraw-Hill.

Noorizan, M.M., NurFareeha Afzan, A.Z., Norfazlina, G. and Sharidatul Akma, A.S. (2016). The Moderating Effects of Motivation on Work Environment and Training Transfer: A Preliminary Analysis. *Procedia Economics and Finance, 37,* 158-163. https://doi.org/10.1016/S2212-5671(16)30107-1

Ogonda, F. O., Orwa, B. H. Peter, W. P., and Jedida, M. V. (2015). An Analysis of Work Motivation and Teacher Job Satisfaction in Public Secondary Schools in Rarieda Sub-County, Kenya. *Journal of Investment and Management, 4* (6), 377-390.

Rasool , A., Jundong, H., and Sohail, M. T. (2017). Relationship of Intrinsic and Extrinsic Rewards on Job Motivation and Job Satisfaction of Expatriates in China. *Journal of Applied Sciences, 17* (3), 116-125. https://doi.org/10.3923/jas.2017.116.125

Raykov, T. and Marcoulides, G. A. (2006). *A First Course in Structural Equation (2nd)* NJ: Lawrence Erlbaum Associates, Publishers.

Robbins, S. P. (2001). *Essentials of organizational behavior*. London: Prentice-Hall.

Sartorius, K., Eitzen, C., Trollip, N.,and Uliana, E. (2011). CSIR The motivational role of interactive control in the research sector: a case study. *South African Journal of Economic and Management Sciences, 14* (4), 379-392. https://doi.org/10.4102/sajems.v14i4.27

Schreiber, J.B. (2008). Core reporting practices in structural equation modeling. *Administrative Pharmacy, 4*, 83-97. https://doi.org/10.1016/j.sapharm.2007.04.003

Stevens, J. (2009). *Applied Multivariate Statistics for the Social Sciences* (*5th*). NY: Routledge.

Suharno, P. and Despinur, D. (2017). The impact of work motivation and competence on employee performance through service quality in administrative staff of Universitas Negeri Jakarta, Indonesia. *Russian Journal of Agricultural and Socio-Economic Sciences, 1* (61), 106-171.

Tao, H.-L. and Chien, W.-H. (2011). Mismatch between Education and Job and Its Influence on Earnings: A Comparison between Female Bachelors and Female Masters. *Bulletin of Educational Research 57* (4), 43-79 (in Chinese).

Tao, H.-L. and Hsiao, F.-F. (2013). Financial Certificates, Academic Characteristics, and Initial Career Performance of Female Business College Graduates. *Taiwan Journal of Applied Economics, 93*, 209-252 (in Chinese).

Thomas, S., and Busby, S. (2003). Do industry collaborative projects enhance students' learning? *Education and Training, 45* (4), 226-235. https://doi.org/10.1108/00400910310478157

Thompson, B. (2004). *Exploratory and confirmatory factor analysis: Understanding concepts and applications*. Washington, DC: American Psychological Association. https://doi.org/10.1037/10694-000

Tsai, S.-L. (2015). Revisiting Selection in Heterogeneous Returns to College Education. *Journal of Social Sciences and Philosophy, 27* (2), 323-360.

Tsai, S.-L. and Mai, C.-C. (1998). Earnings Inequality in Taiwan: 1980–1992.*Humanities and Social Sciences, 8* (4): 706–718.

Vian, T., McIntosh, N., Grabowski, A., Nkabane-Nkholongo, E. L. and Jack, B. W. (2015). Hospital public private partnerships in low resource settings: perceptions of how the Lesotho PPP transformed management systems and performance. *Health Systems and Reform, 1* (2), 155-166. https://doi.org/10.1080/23288604.2015.1029060

Wagner, T. (2010). *The global achievement gap: Why even our best schools don't teach the new survival skills our children need*. NY: Basic Books.

Wanous, J. P., Reichers, A. E., and Hudy, M. J. (1997). Overall job satisfaction: How good are single-item measures? *Journal of Applied Psychology, 82* (2), 247-252. https://doi.org/10.1037/0021-9010.82.2.247

Wee, T. C. (2013). Talent Retention: The Pressures in Malaysia SMEs. *American Journal of Economics, 3* (5C), 35-40.

Weeden, K. A. (2002). Why do some occupations pay more than others? *American Journal of Sociology, 108* (1), 55-101. https://doi.org/10.1086/344121

Yap, M., Cukier, W., Holmes, M. R., and Hannan, C.-A. (2010). Career Satisfaction: A Look behind the Races. *Relations industrielles, 654*, 584-608. https://doi.org/10.7202/045587ar

Received on 12-04-2018 Accepted on 08-05-2018 Published on 11-06-2018

DOI: https://doi.org/10.6000/1929-7092.2018.07.22

© 2018 Hsiao and Lin; Licensee Lifescience Global.
This is an open access article licensed under the terms of the Creative Commons Attribution Non-Commercial License (http://creativecommons.org/licenses/by-nc/3.0/) which permits unrestricted, non-commercial use, distribution and reproduction in any medium, provided the work is properly cited.